Reactions of substituted *N*-(5-nitro-2-furfuryl)anilines

[a]R. MOCELO and [b]J. KOVÁČ

[a]*Department of Organic Chemistry, Faculty of Chemistry, University of Havana*

[b]*Department of Organic Chemistry, Faculty of Chemical Technology, Slovak Technical University, CS-812 37 Bratislava*

Received 24 February 1987

Nitrosation of substituted *N*-(5-nitro-2-furfuryl)anilines gave the corresponding *N*-nitroso derivatives, which in the conditions of Fischer—Hepp rearrangement suffered anomalous denitrosation to chlorides of the starting compounds. Low reactivity of NH group of anilines precluded its acylation, benzoylation, using acetic anhydride and benzoyl chloride, respectively. Azo-coupling with diazonium salts proceeded in position 4 of the benzene ring, in case of more reactive 4-nitrobenzenediazonium chloride even *N*-diazo derivative was formed.

Нитрозация замещенных *N*-(5-нитро-2-фурфурил)анилинов вела к образованию соответствующих *N*-нитрозо-производных, которые в условиях перегруппировки Фишера—Геппа подвергались необычной денитрозации с образованием хлоридов исходных соединений. Низкая реакционноспособность NH-группы анилинов препятствовала ее ацилированию и бензоилированию с использованием соответственно ацетангидрида или бензоилхлорида. Азо-сочетание с солями диазония происходило в положении 4 бензольного кольца. В случае более реакционноспособного хлорида 4-нитробензодиазония образовывалось даже *N*-диазо-производное.

Accessibility of substituted *N*-(5-nitrofurfuryl)anilines [1] prompted our present study of chemical behaviour of this new class of 5-nitrofurfuryl derivatives. Nitrosation was studied in the first place. Electron-acceptor properties of both 5-nitrofurfuryl and protonated amino group acidified hydrogens of the methylene group. In nitrosation reaction the reagent has in principle two pathways open, namely to substituted oximes, *i.e.* an attack at the methylene group, or to *N*-nitroso derivative. Reaction conditions were selected such that both reaction pathways became possible.

Attempts to acylate the NH group of title compounds demonstrated clearly its significantly lowered reactivity. For whereas substituted *N*-alkylanilines could be acylated with acetic anhydride quantitatively, acylation of *N*-(5-nitrofurfuryl)anilines with both acetic anhydride and benzoyl chloride failed. Similarly attempted nitrosation of the NH group by Willenz method, *i.e.* a nitrosation using $NaNO_2$ at 0 °C in emulsion of alkyl aniline and hydrochloric

Table 1

Substituted *N*-nitroso-*N*-(5-nitrofurfuryl)anilines

Compound	R	Formula	M_r	w_i(calc.)/% w_i(found)/%				Yield	M.p.
				C	H	N	Cl	%	°C
I	H	$C_{11}H_9N_3O_4$	247.19	53.40	3.67	16.90		82.7	86—90
				53.34	3.70	17.18			
II	4-Cl	$C_{11}H_8N_3ClO_4$	281.63	46.87	2.86	14.91	12.59	81.0	114—117
				47.19	3.17	14.83	12.20		
III	4-OCH_3	$C_{12}H_{11}N_3O_3$	277.21	51.94	4.01	15.15		79.4	97—101
				51.62	3.92	15.31			
IV	2-CH_3	$C_{12}H_{11}N_3O_4$	261.22	55.12	4.25	16.08		85.4	54—60
				54.85	4.00	15.80			
V	3-CH_3	$C_{12}H_{11}N_3O_4$	261.22	55.12	4.25	16.08		83.2	66—69
				54.99	4.03	15.83			
VI	4-CH_3	$C_{12}H_{11}N_3O_4$	261.22	55.12	4.25	16.08		82.1	94—99
				55.30	4.40	15.81			
VII	2-OH	$C_{11}H_9N_3O_5$	263.18	50.15	3.45	15.95		73.3	85—91
				50.31	3.70	15.80			
VIII	3-OH	$C_{11}H_9N_3O_5$	263.18	50.15	3.45	15.95		75.4	76—82
				50.40	3.69	15.85			
IX	4-OH	$C_{11}H_9N_3O_5$	263.18	50.15	3.45	15.95		78.2	141—145
				50.43	3.59	15.82			

acid gave, due to intrinsically lowered reactivity of the substrate, only almost inseparable mixture of a small amount of *N*-nitrosoaniline and the starting compound.

Satisfactory results have been achieved in homogeneous phase and with prolonged reaction time. Glacial acetic acid was used as solvent, the reaction took 24 h. Results achieved by this technique are summarized in Table 1. Equally good results were obtained, when hydrochloric acid was added to the solution of aniline and sodium nitrite in 60 % ethanol at 50—60 °C [2]. Other solvents did not influence the course of reaction substantially.

TLC probing has been performed to discover possible additional reaction products; neither products of nitrosation at the CH_2 group nor at the benzene ring were detected.

Results in Table 1 show, that benzene ring substituents do not influence the nitrosation. Correspondingly, the correlation coefficient of σ_p and σ_m Hammett constants and ν(NH) was found to be very low, testifying, that the reactivity of the NH group is to a large extent controlled by 5-nitrofurfuryl moiety.

Prepared *N*-nitroso derivatives with free 4-position at the benzene ring were subjected to Fischer—Hepp rearrangement with the aim to produce the corresponding 4-nitrosophenyl derivatives. The strategy failed however, since beside decomposition products only chlorides of the starting *N*-(5-nitrofurfuryl)anilines could be isolated. The rearrangement of *N*-nitroso derivatives is known to be hindered by either bulky alkyl groups at nitrogen [3, 4] or by other substituents in position 4 of the benzene ring, as well as in cases where reactivity of the target position is insufficient [5, 6], as was the case with our *N*-(5-nitrofurfuryl)substituted anilines. The nitrosation was successful when solubility of substituted anilinium chlorides and their *N*-nitroso derivatives differed substantially [7].

Sometimes Fischer—Hepp rearrangement is accompanied by hydrolysis, when *e.g.* from *N*-nitrosobenzylaniline benzaldehyde and aniline was formed [8]. In all our experiments we failed to detect any such hydrolysis product. Variation of solvents and/or activation of position 4 by activating substituents at the benzene ring failed to facilitate the rearrangement, only starting compound, tars, and products of denitrosation could be identified.

Neither was the migration of nitroso group from nitrogen to CH_2 [9] successful. Sodium methoxide in methanol at -30 °C produced only dark tarry solid, from which no low-molecular products could be isolated. Reactions using alkali hydroxides were unsuccessful, too.

For the reaction with diazonium salts *N*-(5-nitrofurfuryl)aniline was used. Reaction conditions were such that the reaction could proceed at all three possible reaction sites (Scheme 1). Experiments showed however, that azo-coupling at the benzene ring was favoured over reaction at either NH or CH_2

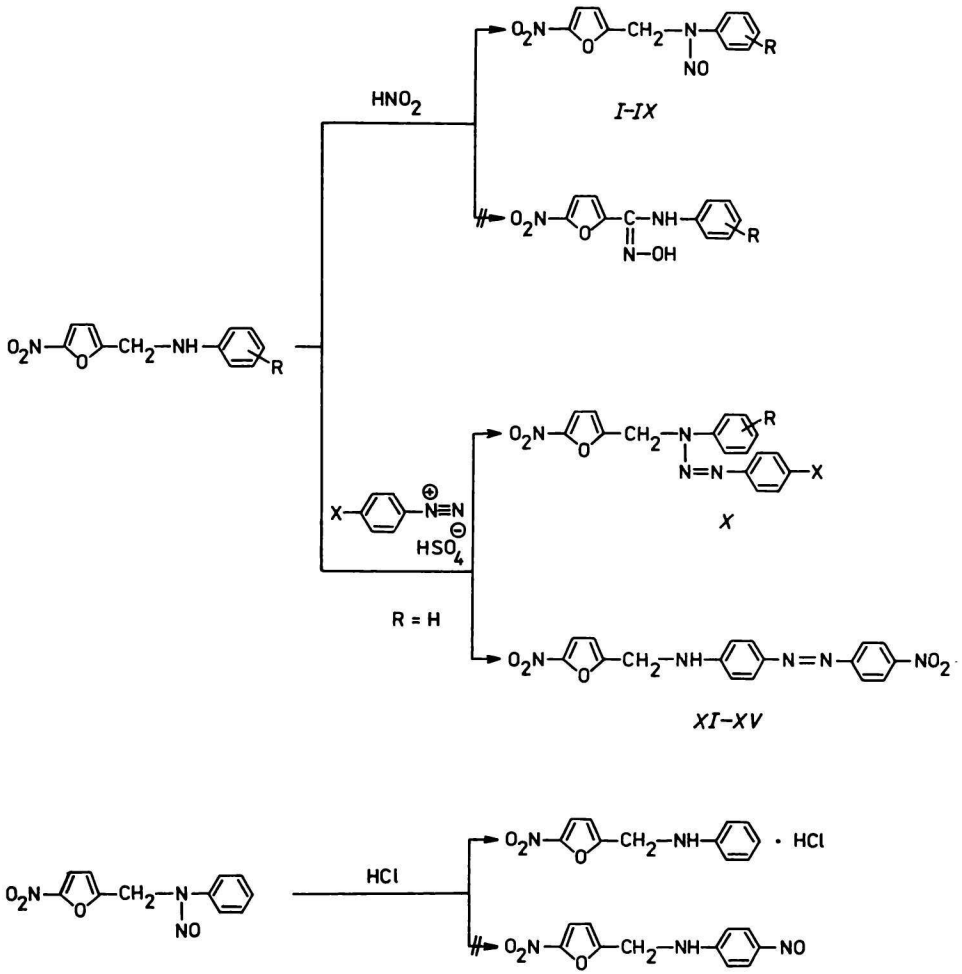

Scheme 1

group. Only in single case, when 4-nitrobenzenediazonium chloride was used, did the reaction produce an additional minor product of *N*-substitution (in mass ratio = 1 : 3) (Table 2).

All synthesized products were characterized by IR, UV, and ^{1}H NMR spectra as well as by additional data (Tables 3—5). Electronic spectra of *N*-nitroso derivatives displayed all three absorption maxima, that were typical for starting amines [1]. Only the second band, ascribed to $n \rightarrow \pi^*$ transition has been significantly blue-shifted by 27 ± 5 nm, *i.e.* from the region $\lambda = 240$—245 nm to 210—218 nm, due to the presence of nitroso group. Azo derivatives *X* and *XI*

Table 2

N-4-Nitrobenzenediazo-5-nitrofurfurylaniline (*X*) and 4-substituted azo derivatives of 5-nitrofurfurylaniline (*XI*—*XV*)

Compound	X	Formula	M_r	w_i(calc.)/% w_i(found)/%					Yield	M.p.
				C	H	N	Br	Cl	%	°C
X	4-NO_2	$C_{17}H_{13}N_5O_5$	367.83	55.18	3.56	18.78			18	159—162
				55.32	3.52	18.89				
XI	4-NO_2	$C_{17}H_{13}N_5O_5$	367.83	55.18	3.56	18.78			55.0	179—182
				55.46	3.57	19.04				
XII	4-OCH_3	$C_{18}H_{16}N_4O_4$	352.34	61.19	4.56	15.74			80.4	198—200
				61.30	4.58	15.89				
XIII	4-CO_2H	$C_{18}H_{14}N_4O_5$	366.31	59.30	4.12	15.36			90.2	270—273
				58.86	4.06	15.28				
XIV	4-Cl	$C_{17}H_{13}N_4ClO_3$	358.29	57.03	3.72	16.01		10.17	84.3	201—205
				56.93	3.76	15.32		9.89		
XV	4-Br	$C_{17}H_{13}N_4BrO_3$	402.74	51.16	3.44	13.83	19.74		85.4	213—215
				50.85	3.36	13.90	19.86			

Table 3

Ultraviolet and visible spectra of compounds *I*—*XV*

Compound	λ_{max}/nm	log {ε}	λ_{max}/nm	log {ε}	λ_{max}/nm	log {ε}	λ_{max}/nm	log {ε}
I	206	4.40	218	4.24	315	4.17		
II	205	4.23	211	4.19	311	4.17		
III	209	4.29	217	4.23	314	4.16		
IV	206	4.23	218	4.18	314	4.13		
V	205	4.24	217	4.20	313	4.12		
VI	205	4.23	218	4.19	315	4.17		
VII	205	4.19	213	4.18	311	4.16		
VIII	206	4.20	210	4.18	314	4.16		
IX	206	4.21	214	4.18	312	4.14		
X	208	4.31	232	4.17	320	4.24	375	4.39
XI	208	4.32	233	4.17	320	4.24	451	4.42
XII	—	—	250	4.17	316	4.33	395	4.48
XIII	—	—	273	4.14	311	4.16	412	4.48
XIV	—	—	251	4.01	311	4.08	397	4.36
XV	—	—	229	4.08	315	4.15	400	4.30

Table 4

Infrared spectra of compounds *I*—*XV*

Compound	$\tilde{\nu}$/cm^{-1}					
	$\nu_s(CH_2)$	$\delta(CH_2)$	$\nu_{as}(NO_2)$	$\nu_s(NO_2)$	ν(NH)	ν(CN)
I	2935	1375	1528	1368		1365
II	2930	1389	1550	1372		1348
III	2920	1386	1550	1364		1350
IV	2890	1398	1520	1368		1351
V	2888	1392	1530	1370		1348
VI	2892	1395	1520	1369		1350
VII	2896	1396	1560	1371		1349
VIII	2888	1397	1550	1368		1349
IX	2887	1389	1536	1369		1348
X	2956	1387	1530	1368		1362
XI	2958	1387	1536	1369	3445	1365
XII	2988	1385	1543	1375	3444	1348
XIII	2950	1386	1562	1372	3380	1355
XIV	2952	1373	1550	1367	3400	1353
XV	2955	1380	1530	1368	3395	1348

Other vibrations: $\tilde{\nu}(\nu_s$(benzene ring)) = (1599 ± 1) cm^{-1}, $\tilde{\nu}(\nu_{as}$(benzene ring)) = = (1500 ± 10) cm^{-1}, $\tilde{\nu}(\nu$(NO)) = (1496 ± 1) cm^{-1}, $\tilde{\nu}(\nu$(CH furan ring)) = (978 ± 1) cm^{-1}, $\tilde{\nu}(\nu_{as}$(COC furan ring)) = (1220 ± 2) cm^{-1}, $\tilde{\nu}(\nu_s$(COC furan ring)) = (1024 ± 1) cm^{-1}.

Table 5

^{1}H NMR chemical shift of compounds *I*—*XV*

Compound	δ/ppm							
	H-3	Furan H-4	$J_{3,4}$/Hz	CH_2 furfuryl	Benzene protons	NH	Other signals	
I[a]	6.44	7.22	3.3	5.19	7.57—7.44 (m)			
II[a]	6.48	7.25	3.4	5.20	7.54 (s)			
III[a]	6.45	7.22	3.3	5.18	7.52, 7.05 (d)		CH_3	3.88
IV[a]	6.43	7.21	3.3	5.18	7.53—7.40 (m)		CH_3	2.42
V[a]	6.44	7.20	3.2	5.19	7.43—7.28 (m)		CH_3	2.39
VI[a]	6.43	7.20	3.2	5.16	7.48—7.29 (d)		CH_3	2.38
VII[b]	6.64	7.57	3.4	5.29	7.45—7.15 (m)		OH	6.72
VIII[b]	6.63	7.59	3.4	5.26	7.30—6.47 (m)		OH	6.78
IX[b]	6.64	7.58	3.4	5.28	7.40, 6.85 (d)		OH	6.73
X[a]	6.65	7.57	3.4	5.55	7.73—8.20 (m)			
XI[a]	6.68	7.58	3.4	4.43	7.88, 7.05 (d)			
X[b]	6.65	7.57	3.4	5.55	7.73—8.20 (m)			
XI[b]	6.68	7.58	3.4	4.43	7.88, 7.05 (d)	4.63		
XII[b]	6.65	7.57	3.3	4.45	7.63, 7.40 (d)	4.58	CH_3	3.46
XIII[b]	6.64	7.58	3.4	4.44	7.70, 7.52 (d)	4.56		
XIV[a]	6.66	7.56	3.4	4.43	7.68, 7.60 (d)	4.54		
XV[b]	6.65	7.56	3.3	4.44	7.70, 7.53 (d)	4.60		

a) In $DCCl_3$; *b*) in DMSO-d_6.

Table 6

Biological activity

Solvent	Compound	Inhibition zone of microorganisms/mm				
		1	*2*	*3*	*4*	*5*
Acetone	*II*	—	19	11	—	—
Acetone	*IV*	13	12	16	11	10
Acetone	*V*	17	24	10	13	13
Acetone	V_A[a]	11	19	15	—	12 [1]
Acetone	*VI*	10	14	13	—	—
Acetone	*IX*	13	23	19	—	10
Acetone	—	9	9	13	—	—
Diethyl ether	*II*	—	17	11	—	—
Diethyl ether	*IV*	12	13	16	10	12
Diethyl ether	*V*	—	—	—	—	—
Diethyl ether	*VI*	10	18	17	—	—
Diethyl ether	*IX*	13	22	19	10	11
Diethyl ether	—	9	9	—	10	—
Ethanol	*II*	—	16	10	—	—
Ethanol	*IV*	19	12	17	10	11
Ethanol	*V*	11	20	9	11	12
Ethanol	*VI*	—	12	12	—	—
Ethanol	*IX*	14	20	19	10	11
Ethanol	—	9	9	10	10	—
H_2O	*II*	—	—	—	—	—
H_2O	*IV*	—	—	—	—	—
H_2O	*V*	—	—	—	—	—
H_2O	*VI*	10	11	11	—	—
H_2O	*IX*	10	13	10	10	—
H_2O	—	—	—	—	—	—

1. Staphylococcus aureus; *2. S. epidermis*; *3. Bacillus subtilis*; *4. Escherichia coli*; *5. Klebsiella pneumoniae*.

a) V_A = *N*-(5-nitro-2-furfuryl)-3-methylphenylamine.

showed four bands in their UV spectra, derivatives *XII*—*XV* three bands in ultraviolet and visible region.

^{1}H NMR data (Table 5) support the suggested structures. Signals of methylene protons were strongly influenced by the neighbouring NH group. In case of free NH group, methylene signal has been found at $\delta = 4.44$ ppm, substitution at nitrogen shifted the signal downfields to $\delta = 5.18$—5.55 ppm, which facilitated the differentiation between substitution at carbon and at nitrogen.

Distinction between C and N substitution was also possible from mass spectra of compounds *X* and *XI*. Both spectra displayed a molecular ion at $m/z = 367$. Fragmentation of *X* encompasses a loss of $O_2N—C_6H_4—N_2$, sup-

ported by $M^{+\bullet} - 149$ peak, whereas compound *XI* splits off $O_2N—C_6H_5$, producing an ion at $m/z = 245$, as well as a nitro group, producing an ion at $m/z = 321$. Such splitting pattern indicates different bond strengths between the azo group and aromatic carbon and nitrogen, respectively.

Selective antimicrobial activity has been found for 5-nitrofurfurylanilines [1], consequently preliminary tests were performed in which growth inhibition of five microorganisms by selected *N*-nitroso derivatives was determined (Table 6). Comparison with the activity of analogous 5-nitrofurfurylanilines showed that *N*-nitroso derivatives exhibited slightly enhanced inhibition effect.

Experimental

Melting points were determined with a Kofler hot-stage melting point apparatus. ^{1}H NMR spectra of compounds *I*—*VI*, *X*, and *XIV* were obtained on a Tesla 80 MHz BS 487 C spectrometer in deuteriochloroform, NMR spectra of compounds *VII*—*IX*, *XI*—*XIII*, and *XV* were taken of hexadeuteriodimethyl sulfoxide solutions, using tetramethylsilane as internal standard. Infrared spectra were recorded on a Zeiss spectrometer UR-20, calibrated with a polystyrene film, in NaCl cuvette with 0.6 mm wall thickness. Spectra of *I*—*IX* were measured in chloroform at concentration 2×10^{-2} mol dm^{-3}, spectra of *X*—*XV* from KBr pellets. Electronic spectra were taken with a Zeiss model UV VIS spectrophotometer of methanol solutions, having concentration 3×10^{-5}—5×10^{-5} mol dm^{-3}, in 1 cm cuvettes. Mass spectra of *X* and *XI* were obtained using an AEI MS 902 spectrometer at 50 eV ionization potential, 100 μA ionizing current, using an ion source temperature of 150 °C.

Compounds *II*, *IV*, *V*, *VI*, and *IX* were tested against *Staphylococcus aureus*, *S. epidermis*, *Bacillus subtilis*, *Escherichia coli*, and *Klebsiella pneumoniae*. Microbial culture was prepared by 18 h growth on agar. Filter paper discs, treated with 0.01 cm^3 of 1 % solution of the tested compound were situated in the middle of the testing culture. After 48 h cultivation at 37 °C inhibition zones were determined. Control experiments were performed with the solvent used (Table 6).

N-(5-Nitro-2-furfuryl)-N-nitrosoanilines (I—IX)

Method A

To the solution of 5 mmol of *N*-(5-nitro-2-furfuryl)aniline in 4 cm^3 of acetic acid, cooled to 0—5 °C, a solution of sodium nitrite (0.47 g; 7 mmol) in 3 cm^3 of water was added during 20 min. Reaction mixture was left to stand overnight at 10 °C, the separated yellow solid was sucked off, washed with 40 cm^3 of water, dried and crystallized from hexane. Yields of compounds *I*—*IX*, their melting points, and elemental analyses are in Table 1.

Method B

The solution of 2.3 mmol of the corresponding *N*-(5-nitro-2-furfuryl)aniline, 2.8 mmol of $NaNO_2$ in 70 cm^3 of diluted ethanol (70 %) was placed in a three-neck flask, equipped with stirrer and reflux condenser. 5 cm^3 of HCl (conc.) was added through the condenser and the stirred reaction mixture was kept at 50—60 °C for 4 h, then cooled to 20 °C and mixed with 300 cm^3 of ice water. Separated yellow solid was filtered off, washed with water, dried and crystallized from hexane (yields: *I* 80 %, *II* 79 %, *III* 81 %).

Reactions of substituted N-(5-nitro-2-furfuryl)-N-nitrosoanilines (I—III) with HCl

Method A

Ethereal solution of 1.8 mmol of compounds *I—III* was at 0 °C mixed with a saturated solution of HCl in dry ethanol (10 cm^3). The mixture immediately turned red and after a period of 2—3 min evolution of gas was observed. After 2 h stirring and standing overnight the colour became yellow. Addition of excess of ethyl ether caused precipitation of yellow solid, which was separated and dried.

Method B

A solution of dry HCl in 15 cm^3 of glacial acetic acid was added to 5 cm^3 of ethereal solution of 1.8 mmol of compounds *I—III*, respectively. The mixture turned red and a small amount of crystals separated. After standing overnight, ether was added to the mixture, the precipitated product was washed and dried.

Both procedures produced the corresponding *N*-(5-nitro-2-furfuryl)anilinium chloride.

Reaction of N-(5-nitro-2-furfuryl)aniline with 4-X-benzenediazonium sulfates

To the solution of 4-X-benzenediazonium sulfate, prepared from 16 mmol of 4-X-aniline, 5 g of H_2SO_4 (conc.) and 1.4 g (18 mmol) of $NaNO_2$ [10] was added dropwise 50 cm^3 methanolic solution of *N*-(5-nitro-2-furfuryl)aniline (23 mmol). The reaction mixture was stirred for 15 min, then one half of the solution of sodium acetate (1.5 g) in 5 cm^3 of water was added. After standing for 1 h at 5 °C and for 1 h at room temperature after addition of the rest of acetate solution a solid separated from the solution. The solid was filtered, washed first with water (10 cm^3), then with 10 % acetic acid and again with water; crystallization from 50 cm^3 of methanol gave products *XII—XV*. In cases, where two products were identified by TLC, separation on a silica gel column was undertaken, using chloroform—acetone mixture in 1 : 1 volume ratio as eluant. In this way compound *X* was isolated from the first fraction, *XI* from subsequent fractions. Yields, elemental analyses, and spectral data are contained in Tables 2—5. Most intensive peaks in mass spectra of compounds *X* and *XI* are listed below, m/z (relative intensity I_r/%):

$M^{+\bullet}$ (*X*): 367 (2), 321 (10), 218 (18), 216 (23), 150 (63), 122 (90), 104 (60), 92 (28), 77 (100), 51 (69), 44 (62), 39 (40), 30 (56), 28 (93).

$M^{+\bullet}$ (*XI*): 367 (28), 242 (29), 277 (24), 122 (34), 120 (40), 92 (100), 76 (40), 65 (50), 44 (50), 28 (93).

Acknowledgements. The authors are indebted to Dr. O. Barrios of Microbial Laboratory in MINSAP, Havana for performing microbial tests.

References

1. Mocelo, R. and Kováč, J., *Collect. Czechoslov. Chem. Commun. 48*, 2682 (1983).
2. Tanaka, A. and Uzui, T., *Chem. Pharm. Bull. 28*, 1604 (1980).
3. Willenz, J., *J. Chem. Soc. 1955*, 1677.
4. Hickenbottom, W. J., *J. Chem. Soc. 1933*, 946.
5. Neber, P. W. and Rauscher, H., *Justus Liebigs Ann. Chem. 550*, 182 (1942).
6. Glazer, J., Hughes, E. D., Ingold, C. K., James, A. T., Jones, G. T., and Roberts, E., *J. Chem. Soc. 1950*, 2657.
7. Fischer, O., *Ber. Dtsch. Chem. Ges. 45*, 1098 (1912).
8. Fischer, O. and Hepp, E., *Ber. Dtsch. Chem. Ges. 19*, 2991 (1856).
9. Deaniker, H. U., *Helv. Chim. Acta 47*, 33 (1964).
10. Jurášek, A. *et al.*, *Základy organickej syntézy*. (Fundamentals of Organic Synthesis.) P. 212. Alfa Publishers, Bratislava, 1975.

Translated by P. Zálupský